General description

VMP3110 is a compact, ultra high efficiency low voltage DC-DC power supply module. It integrated all necessary components in a small (0.7”x0.6”x0.14”) package. The internal DC-DC converter can convert 3.6V-5.5V input voltage to 1.0-3.3V, up to 1.0A current. The small size, low profile and high efficiency makes it is the ideal choice for applications which size and energy requirement is critical.

1. Applications

- Instruments
- Handheld devices
- Communication equipments
- Battery powered devices
- Home entertainment
- Embedded, DSP, FPGA systems

2. Pinout

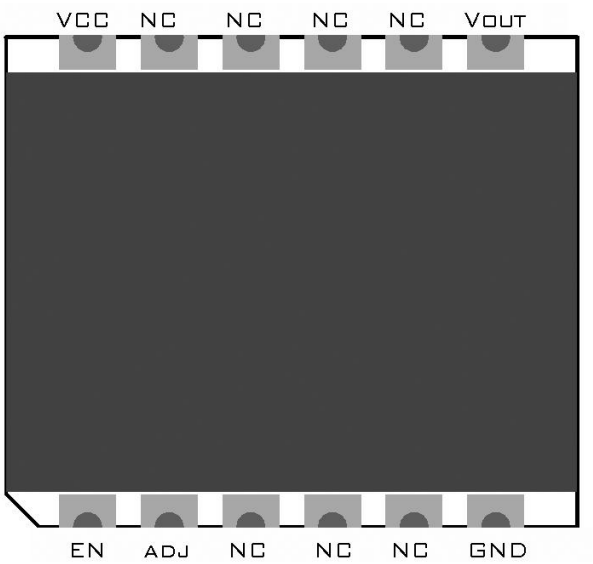

Pin Description

Pin No.	Name	Function Description
1	EN	Connected to VCC will active the output. Connected to GND will put the module in idle mode
2	ADJ	Output voltage adjustment. Output voltage = 3.3v when Connected to GND. Connect a resistor between GND and ADJ can adjust the output voltage between 1.0V to 3.3V
6	GND	Power Ground

7	Vout	Voltage Output
12	VCC	Power input (3.6V-5.5V)

3. Electrical Characteristics

Parameters	Value
Supply Voltage	3.6V to 5.5V
Output Voltage	1.0V-3.3V adjustable
Output Current	1.0A
Efficiency	95% max
Idle Current	10uA
Vp-p	50mV(full load)

4. Reference Design

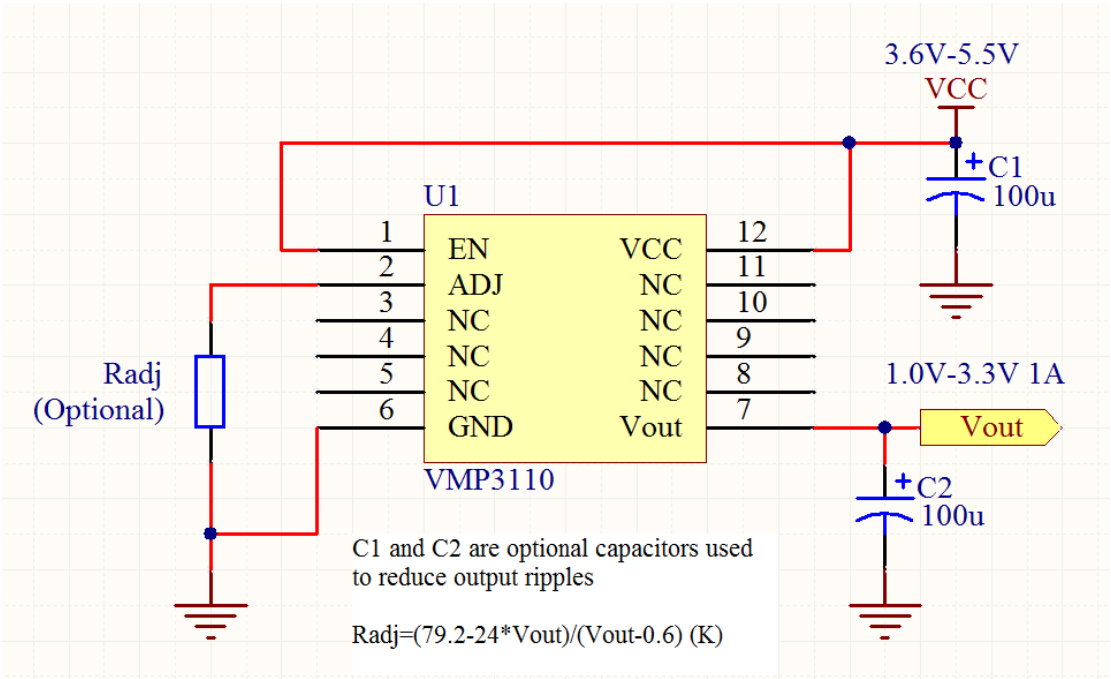

5. Set the output voltage

The output voltage is programmed by connecting a resistor between ADJ (pin2) and GND. The value of Radj us calculated by the following formular:

$$R_{adj} = \frac{79.2 - 24 \times V_{out}}{V_{out} - 0.6} (K\Omega)$$

Radj can also be selected from the following table:

Vout (V)	Radj (k)
3.3	–
3.0	3.0

2.5	10.1
2.0	22.3
1.8	30.0
1.5	48.0
1.2	84.0
1.0	138.0
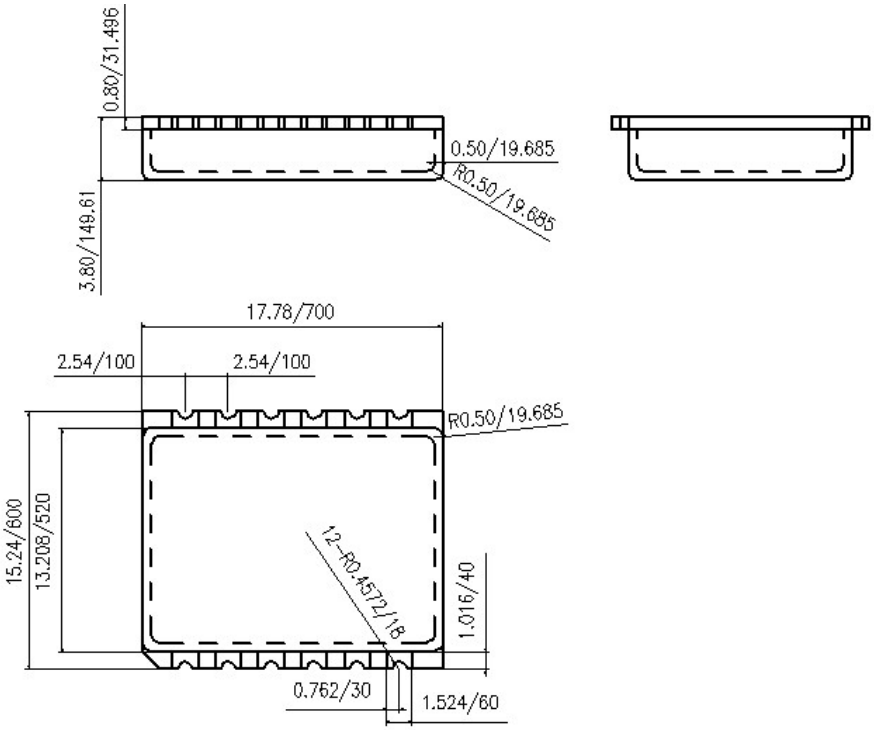
6. Footprint and dimensions